CONVERGENCE SYSTEMS LIMITED

CS108B
Rechargeable Lithium-ion Polymer Battery Pack

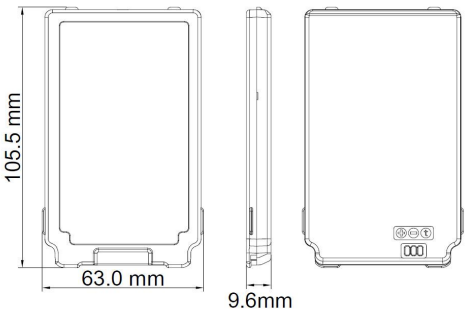

Information about the product

Dimensions	Length: 91mm(3.58 in); Width: 56mm(2.20 in); Thickness: 7mm(0.28 in)
Weight	Weight: 88 g
Battery Technology	Lithium-Ion (Li-ion) Polymer
Battery Capacity	Nominal Voltage: DC 3.7Volt; Capacity : 3400mAH, 12.6Wh
Application	RFID Sled Handheld Reader
Product Color	Black
Compatible Product	CS108 (Reader); CS108C (Battery Charger)
Packaging	1 pc(s); single packed
Warranty	6 Months
Certifications	CB: IEC 62133:2012 (Second Edition) CE: EN 55032:2015; EN 55024:2010/A1: 2015; EN 61000-3-2: 2014; EN 61000-3-3: 2013 UN38.3;
Charging Method	1) CS108B can be charged while inside the CS108 RFID Reader by plugging a USB cable between CS108 and a USB charger. 2) CS108B can be charged using CS108C, the external 2 slot charger for CS108B.
Order Code :	CS108B

Contact us at **info@convergence.com.hk** or visit our website at **www.convergence.com.hk**